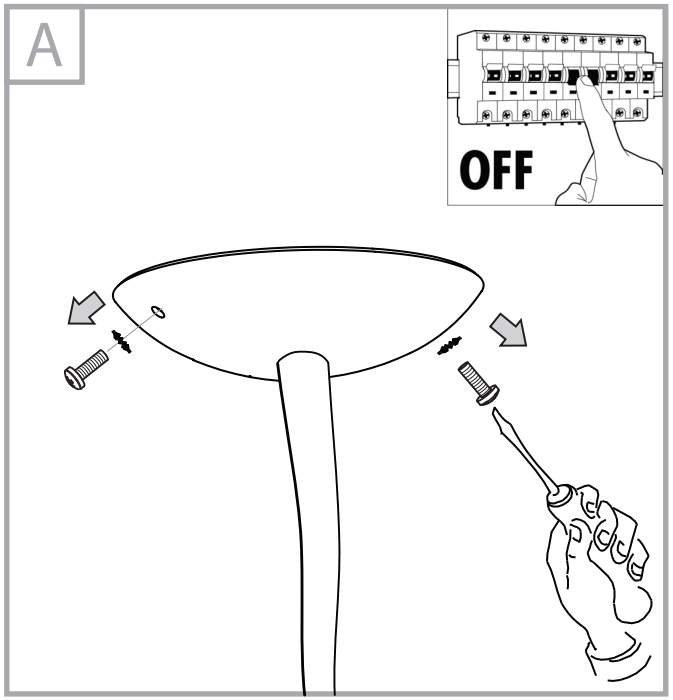
A
OFF

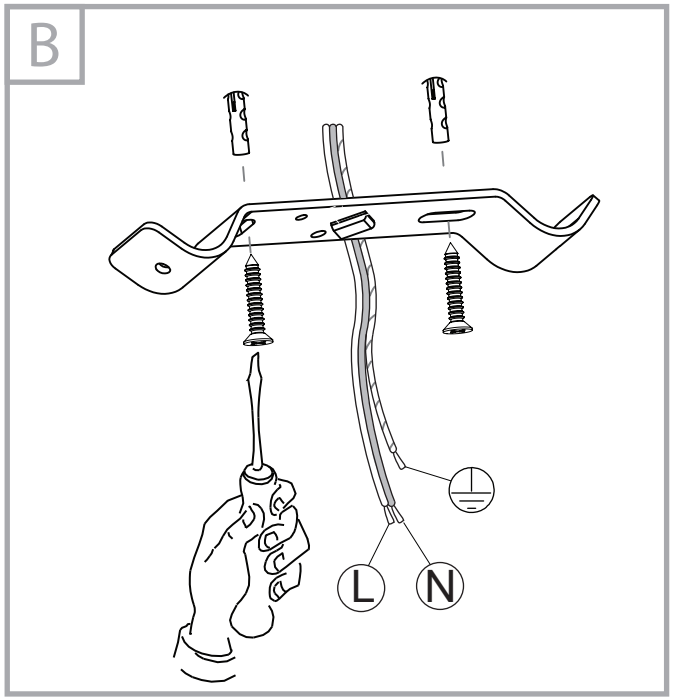
B
L
N

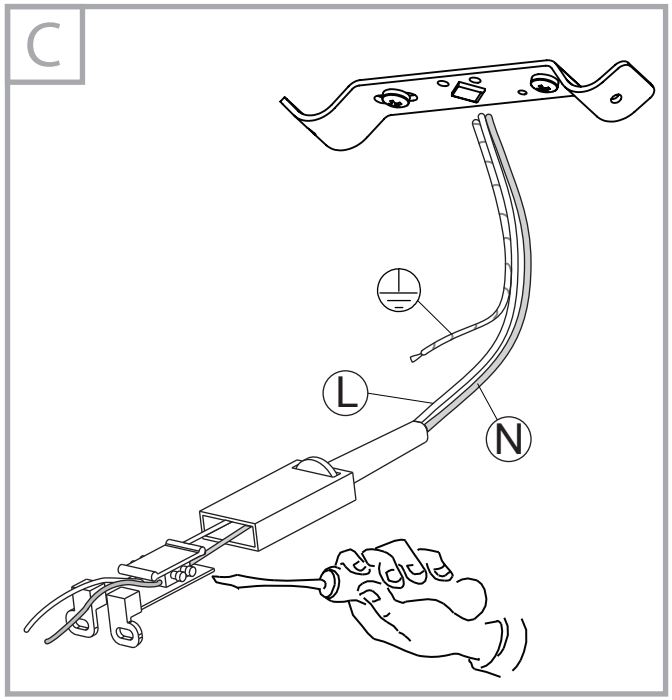
C
L
N

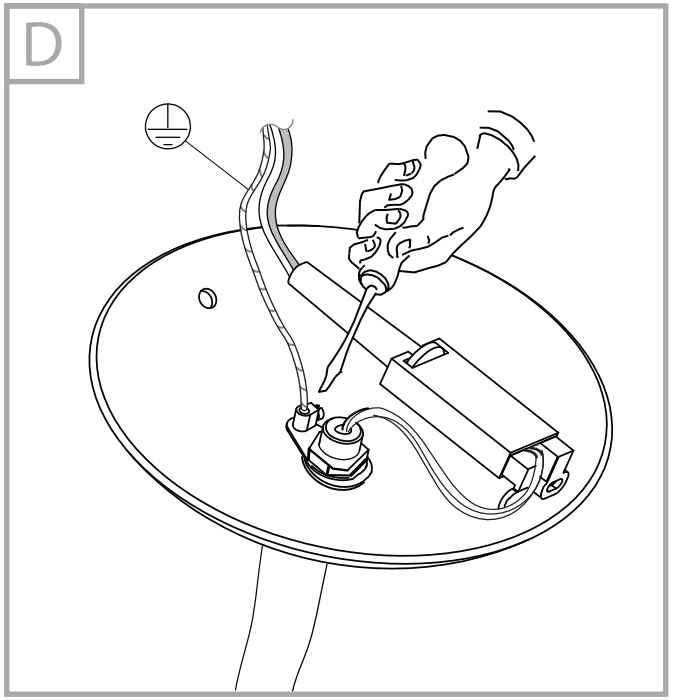
D

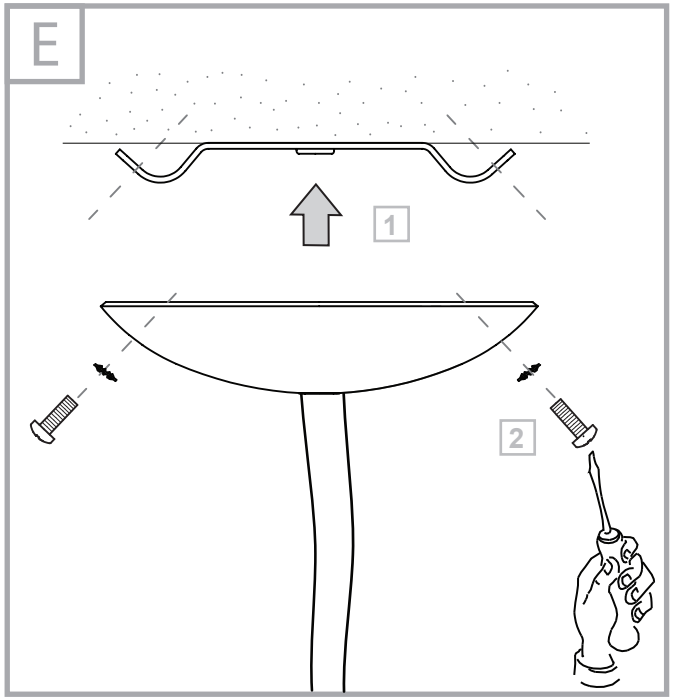
E
1
2

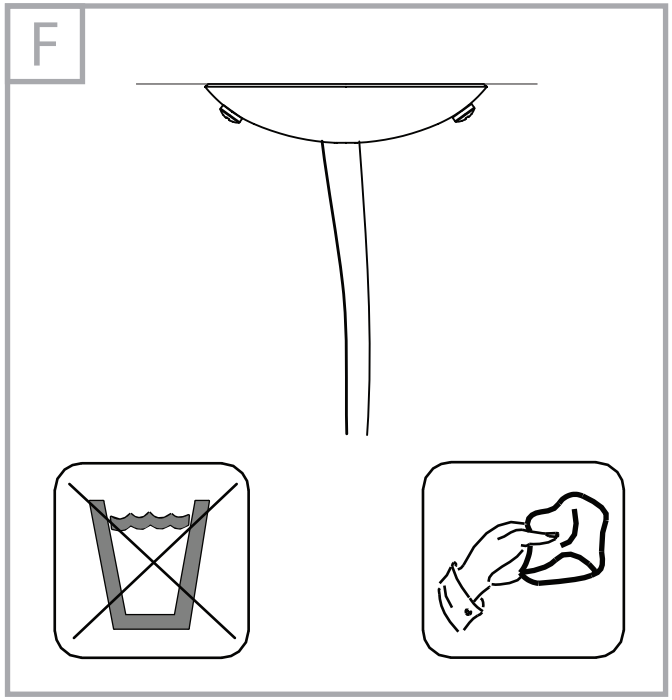
F